PARTS LIST NO. 530164126		WEED EATER® PARTS LIST	MODEL(s) TE 475
DATE 2/24/10	Replaces 530164126 – 7/30/09	**Note:** Illustration may differ from actual model due to design changes	PAGE NO. 1

⚠ WARNING

All repairs, adjustments and maintenance not described in the Operator's Manual must be performed by qualified service personnel.

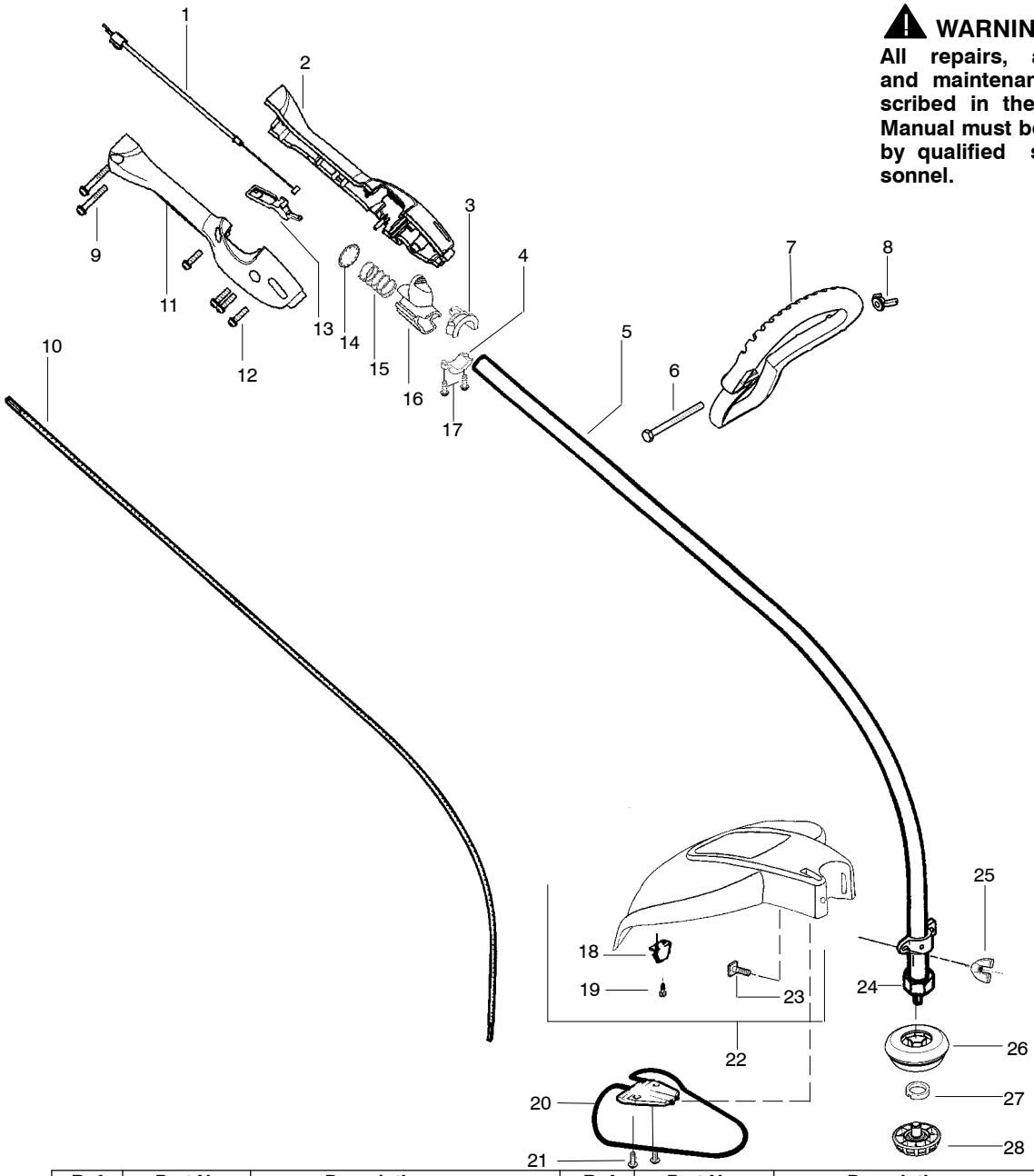

Ref.	Part No.	Description	Ref.	Part No.	Description
1.	530057785	Assy – Throttle Cable	18.	530052287	Line Limiter
2.	530058747	Throttle Hsg. (Left)	19.	530015814	Screw – Line Limiter
3.	530057562	Locator – left	20.	530054459	Assy – Wire Guard
4.	530057563	Locator – right	21.	530016179	Screw
5.	530071779	Assy – Drive Shaft Hsg. (incl. 3,4,15 – 17,24)	22.	530071749	Kit – Shield (Incl.18,19,23,25)
			23.	530015820	Bolt – Shield
6.	530016422	Bolt – Handle	24.	– – –	Dust Cup
7.	530058752	Handle – Assist	25.	530016152	Wingnut
8.	530016152	Wingnut – Handle	26.	952711574	Accy – Spool w/Line (Incl. 27)
9.	530016406	Screw	27.	530403949	Guide – Line
10.	530095939	Shaft – Flex	28.	530054223	Assy – Cap
11.	530058748	Throttle Hsg. (Right)			
12.	530015814	Screw		Not Shown	
13.	530058000	Trigger			
14.	530016405	Nut – Push			
15.	530016407	Spring – Actuator		530058594	Decal – Start Inst.
16.	530057551	Actuator		530058597	Decal – Choke
17.	530015810	Screw		545144405	Decal – Shaft Warning

✓ = NEW PART NUMBER FOR THIS IPL ★ = REFER TO THE SERVICE REFERENCE INDICATED FOR MORE INFORMATION. (LOCATED AT END OF IPL)

PARTS LIST NO. 530164126		WEED EATER® PARTS LIST	MODEL(s) TE 475
DATE 2/24/10	Replaces 530164126 – 7/30/09	**Note:** Illustration may differ from actual model due to design changes	PAGE NO. 2

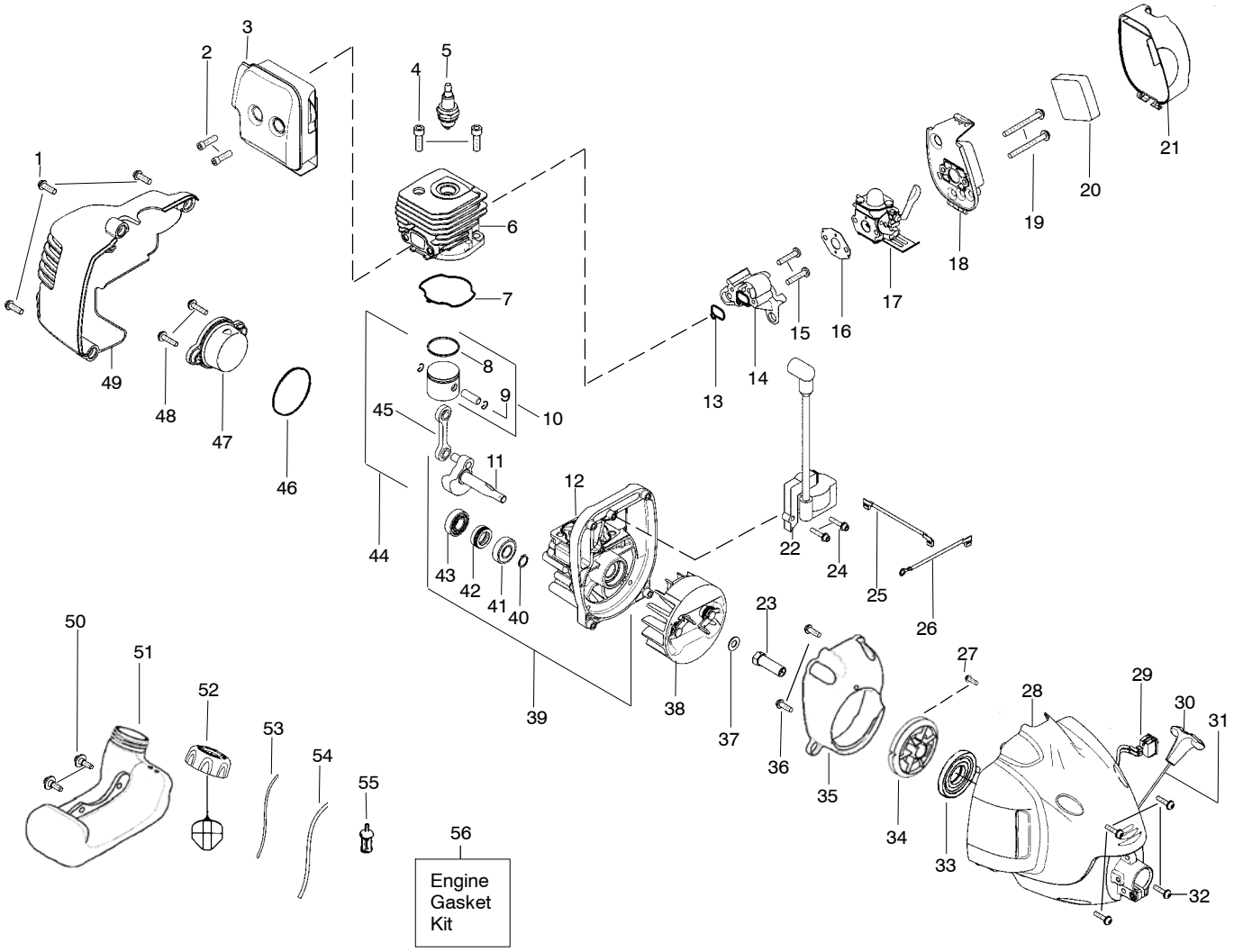

Ref.	Part No.	Description	Ref.	Part No.	Description	Ref.	Part No.	Description
1.	530015880	Screw	21.	530058740	Cover-Air Box	45.	530069945	Assy-Connecting Rod
2.	530058982	Bolt-Muffler	22.	545081826	Kit - Ignition Module	46.	530071750	O-Ring-C'case (kit)
3.	✓ 545227901	Assy-Muffler/Shield (Incl. 2)	23.	530027953	Coupling-Drive	47.	530058738	Assy-Plug (incl.46)
			24.	530016357	Screw	48.	530016386	Screw
4.	530015953	Screw-Cylinder	25.	530014663	Assy-Leadwire	49.	530058737	Shroud-Rear
5.	952030249	Spark Plug (RCJ 6Y)	26.	530014662	Assy-Ground Wire	50.	530016431	Retainer-Tank
6.	530012541	Cylinder	27.	530016391	Screw	51.	545103702	Assy-Fuel Tank (incl. filter, lines & fuel cap)
7.	530071750	Seal-Cylinder (kit)	28.	530071735	Assy.-Fan Hsg			
8.	530055120	Piston Ring	29.	530071356	Kit-Switch	52.	530058743	Assy-Fuel Cap
9.	530015162	Retainer-Piston Pin	30.	530058742	Handle-Starter	53.	530069247	Kit-Fuel Line (Small)
10.	530071833	Kit - Piston (Incl. 8, 9)	31.	530071798	Kit - Rope	54.	530069216	Kit-Fuel Line (Large)
11.	530012555	Assy-Crankshaft	32.	530015810	Screw	55.	530095646	Assy-Fuel Pickup
12.	530012584	Assy-Crankcase (Incl. 41-43)	33.	✓ 545213601	Spring-Starter	56.	530071750	Kit-Engine Gasket (Incl. 7,13,16,46)
			34.	530071797	Kit-Starter Pulley			
13.	530071750	Seal-Cyl/Carb.(kit)	35.	530057548	Baffle			
14.	530057547	Adapter-Carb.	36.	530015880	Screw			
15.	530016309	Screw	37.	530015828	Washer-Flat			
16.	530071750	Gasket-Carb. (kit)	38.	530054115	Assy-Flywheel			
17.	----	Kit-Carb.	39.	530071751	Assy-C'case & C'shaft (Incl. 11,12,40)		Not Shown	
	530071752	Zama (C1U-W18)						
	545081808	Walbro (WT-669)	40.	530015941	Retain. Ring-C'shaft			
(Note: Repair kits are not available for this carburetor)			41.	530055728	Outer Bearing		530057827	Choke Lever - Zama
			42.	530019264	Seal		530058662	Choke Lever - Walbro
18.	530057544	Air Box	43.	530032125	Inner Bearing		530058709	Bulb-Purge
19.	530016429	Screw	44.	530071785	Kit-Piston/Rod (Incl. 10,45)			
20.	530036575	Foam-Air Filter						

✓ = NEW PART NUMBER FOR THIS IPL ★ = REFER TO THE SERVICE REFERENCE INDICATED FOR MORE INFORMATION. (LOCATED AT END OF IPL)