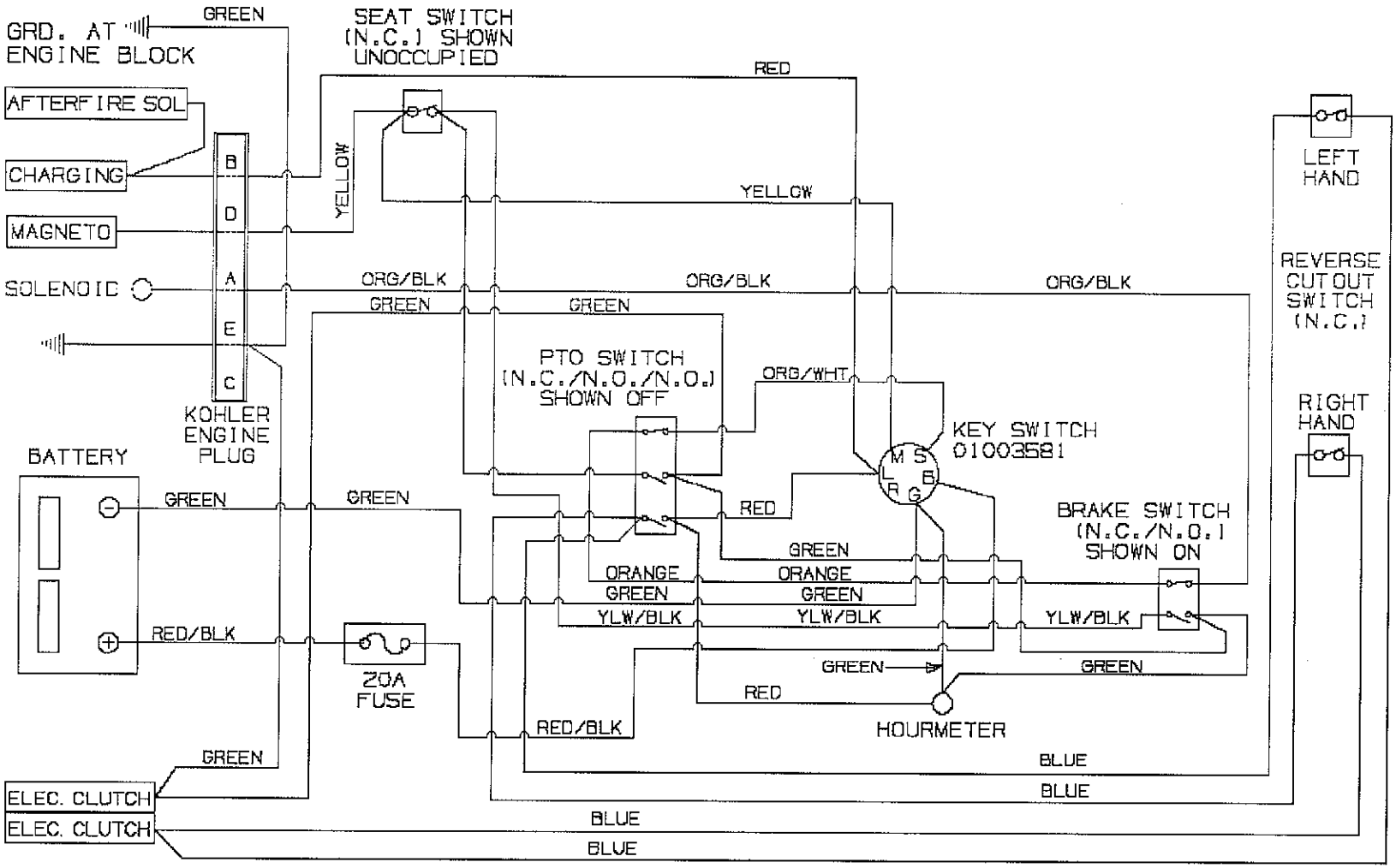MODEL Z-FORCE 60 (2007)
HARNESS NUMBER (02002990)